

SLIT LAMP BQ 900
Sophisticated microscopy

Look closer. See further.

HAAG-STREIT DIAGNOSTICS

THE VERSATILE SLIT LAMP

BQ 900
Sophisticated microscopy, outstanding performance

Since its introduction in 1958, the famous Goldmann slit lamp BM 900 has enjoyed remarkable popularity amongst our customers because of its excellent optics and impressive longevity. As a result, more than 100,000 eyecare specialists decided to purchase one of these superb slit lamps.

Further innovations have followed to cover more advanced needs in slit lamp examination including the unique stereo variator, a wider range of magnifications and innovative imaging solutions. The primary goal of each Haag-Streit slit lamp development, however, has always been the same: to provide a slit lamp with excellent optics, optimum illumination, and superior mechanics.

Technical specifications

BQ 900

Illumination	Light-source	LED for examination (slit and background illumination)
	Slit width	0 – 14 mm continuous
	Slit length	1 – 14 mm continuous and fixed apertures
	Illumination field diameter	ø 8 / 5 / 3 / 2 / 1 / 0.2 mm, test mark with fixation star
	Slit image rotatability	± 90°
	Swiveling of the slit illumination to the microscope axis	Horizontal ± 90°, vertical 0 – 20°
	Filters	Blue, red-free (green) and grey (10 %)
Microscope	Stereo angle	13°
	Overall magnification	6.3 ×, 10 ×, 16 ×, 25 × and 40×
	Eyepiece magnification	12.5×
	Range of adjusting eyepieces	+8 to –8 diopters
	Interpupillary distance	52 – 78 mm
	Yellow filter	Optional
	Inclined eyepiece	Optional
Instrument base	Operation	Single handed 3-dimensional operation of the control lever
	Spatial adjustment of the instrument base	100 mm (length), 100 mm (side), 30 mm (height)
Measures (W × L × H)		332 mm × 305 mm × 700 mm

AT 900

Measuring force	Generated by leverage weight
Installation	AT 900 model BQ, assembly on the microscope arm.
Measurement range	0 – 80 mm Hg

Imaging Modules

	Imaging Module 910	Imaging Module 910 3D	Imaging Module 600
Compatibility	BQ 900	BQ 900	BP 900 and BQ 900
Beam path	Right side	Right and left side	Right side
Control panel	RM03	RM03	RM02
Depth of focus control	Yes	Yes	No
Camera interface	CoaXPress	CoaXPress	USB 3.0
Shutter system	Global shutter	Global shutter	Global shutter
Resolution	4.9 MP	4.9 MP	2.3 MP
Frame rate	30 (frames per second)	30 (frames per second)	30 (frames per second)
Software	EyeSuite Imaging (optional)	EyeSuite Imaging (optional)	EyeSuite Imaging (mandatory)
EMR interfaces	EyeSuite script language, DICOM (SCU) GDT, Samba Share for direct import into patient file	EyeSuite script language, DICOM (SCU) GDT, Samba Share for direct import into patient file	EyeSuite script language, DICOM (SCU) GDT
Connector Box	Yes	Yes	No
Connector Box connectivity	HDMI out DisplayPort out Ethernet	HDMI out DisplayPort out Ethernet	n/a
3D imaging	Optional	Yes	No

Slit lamp BQ 900 & Imaging Module 910

1. LED illumination head
2. Background illumination
3. Eyepiece with double cross hair reticule
4. Knob for beam splitter/camera on-off
5. Aperture control knob
6. Diffuser
7. Imaging Module 910
8. Shutter-release
9. Illumination control

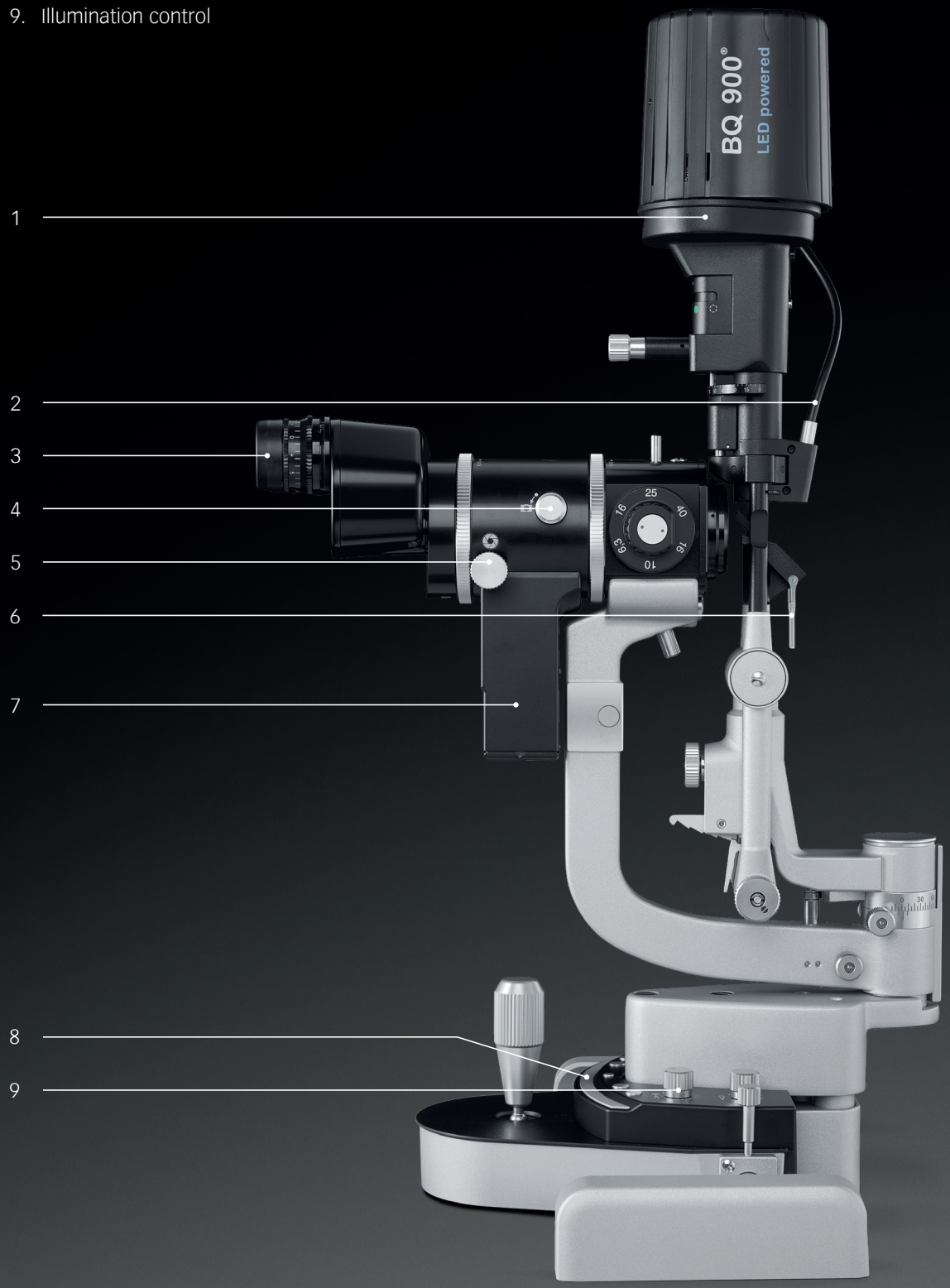

Wide range of applications

INCLINED EYEPIECE ADAPTOR

Ergonomic & fatigue-free working

With the inclined eyepiece adaptor, the view into the microscope is inclined at 20 degrees to the horizontal. This enables the examiner the use of the slit lamp in a more comfortable, fatigue-free position.



INCLINED EYEPIECE ADAPTOR

STEREO VARIATOR

Enhanced view on fundus

Unique to the BQ 900, the stereo variator reduces the angle of stereoscopic observation from 13° to 4.5°. This facilitates the stereoscopic examination of the fundus, peripheral parts of the retina and the vitreous, even under unfavorable conditions such as high myopia and small pupils. The reduction of the angle enlarges the stereoscopic field of view under the described conditions, maintaining depth information in the stereoscopic observation.

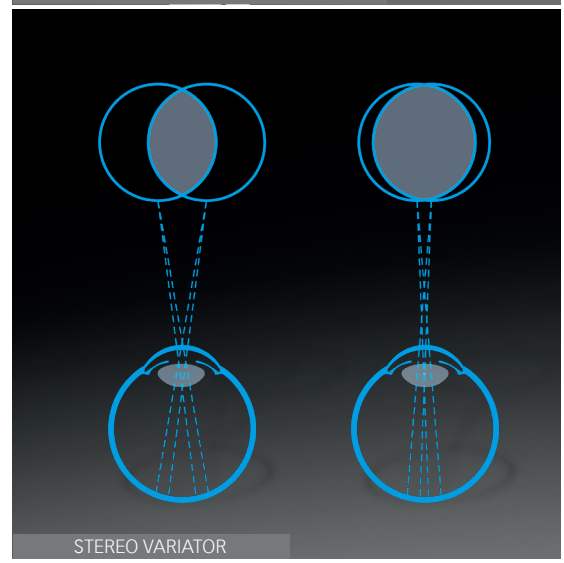
STEREO VARIATOR

BEAM SPLITTER

Connection to a wide range of accessories

The beam splitter diverts a portion of the light to secondary attachments such as the second observer tube, video, or digital cameras. Beam Splitters are available in different versions. The beam splitter for cameras diverts 70% of the light to the secondary attachment, the one for co-observation under equal conditions diverts only 50% of the light.

Video or digital cameras can be connected to the beam splitter with a range of C-mount adapters, which offer different focus lengths for variable sensor sizes.


BEAM SPLITTER


SECOND OBSERVER TUBES

SECOND OBSERVER TUBES

Analog co-observing

Haag-Streit's second observer tubes are designed to permit professional colleagues, students, or technicians to participate in the examination. There are two versions of second observer tubes available: a short version for co-observing in a sitting position and a long version for co-observing in an upright position.

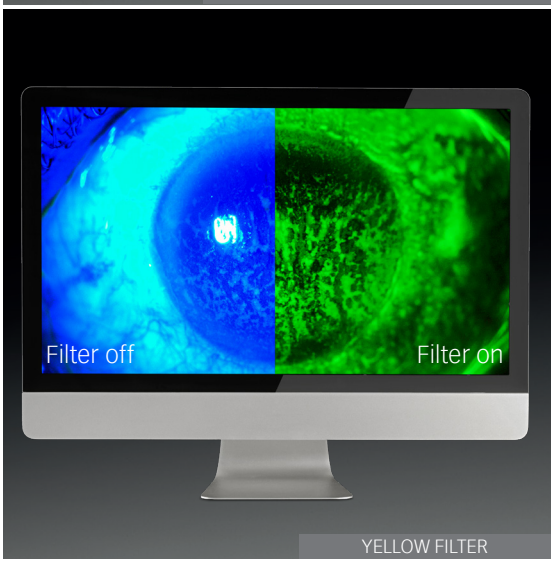

YELLOW FILTER

YELLOW FILTER

Fluorescence enhancement

This yellow barrier filter provides additional contrast to fluorescein images. It can be mounted permanently on the slit lamp and easily inserted or removed as required.


INSTRUMENT TABLES

INSTRUMENT TABLES

The ergonomic workplace

With its clear cut design, the HSM 600 offers a subtle modern style that complements most examination rooms. Thanks to its intelligent design, the table guarantees that all equipment can be neatly installed and all trailing cables are fully enclosed. The high quality of the material used promises exceptional stability and durability.

Wide range of applications

APPLANATION TONOMETER

The original Goldmann tonometer

Because it is fast and reproducible, Goldmann applanation tonometry has been the gold standard in tonometry for many decades. It is based on the Goldmann principle, which has been tried and tested with millions of patients over more than 50 years.

Furthermore, thanks to Haag-Streit's high-precision manufacturing, the Goldmann application tonometer offers years of reliable performance without requiring manufacturer maintenance.



APPLANATION TONOMETER

IMAGING MODULE 910

Innovating the field of slit lamp imaging

The Imaging Module 910 (IM 910) is a compact imaging solution for the BQ 900 slit lamp. Boasting an integrated workflow, smart features, and 3D-ready functionality, it streamlines your activities enabling full patient focus. Turn one knob and the IM 910 shares your view from the microscope directly on your screen – instantly!

Take advantage of the Imaging Module 910 3D (IM 910 3D) and say good-bye to "flat" images. This dynamic 3D live-stream creates a detailed, authentic representation of the slit lamp exam, supporting better documentation, more collaborative teaching, and teleconsultation* possibilities.

Furthermore, integration with your preferred system – EyeSuite, EMR or DICOM – makes image data easy to store and manage.


IMAGING MODULE 910

IMAGING MODULE 600

Simple slit lamp imaging & documentation

The default imaging solution for the BP 900 slit lamp, the Imaging Module 600 (IM 600), is a cost-effective alternative to the IM 910, supporting a full examination workflow and comprehensive slit lamp documentation.

Its ergonomic design provides full control of the imaging process without detracting from the clinical examination, with a control panel that can be operated "blindly" to support intuitive operation of both the camera and the slit lamp illumination.

With integrated EyeSuite software, the IM 600 supports a structured patient management system and facilitates simple integration with your existing EMR or DICOM system.


IMAGING MODULE 600

*Available in the USA only, not available in the EU

EYESUITE PLATFORM

Connectivity is key
Seamless integration for optimal workflow

The EyeSuite software is designed for optimal patient flow in busy practices. Supporting the Haag-Streit imaging solutions, the software makes your slit lamp networkable both with other Haag-Streit devices and your practice network. EyeSuite does not require any proprietary third-party software to provide connectivity.

If the slit lamp is connected to an EyeSuite server, all the images taken can be accessed remotely from any number of viewing stations connected to the same database.

Furthermore, the EyeSuite Script Language or standardized interfaces, such as GDT or DICOM, connect easily to almost any electronic medical record (EMR) system. Patient orders can be received from the EMR system, and the captured images are then automatically returned to it.

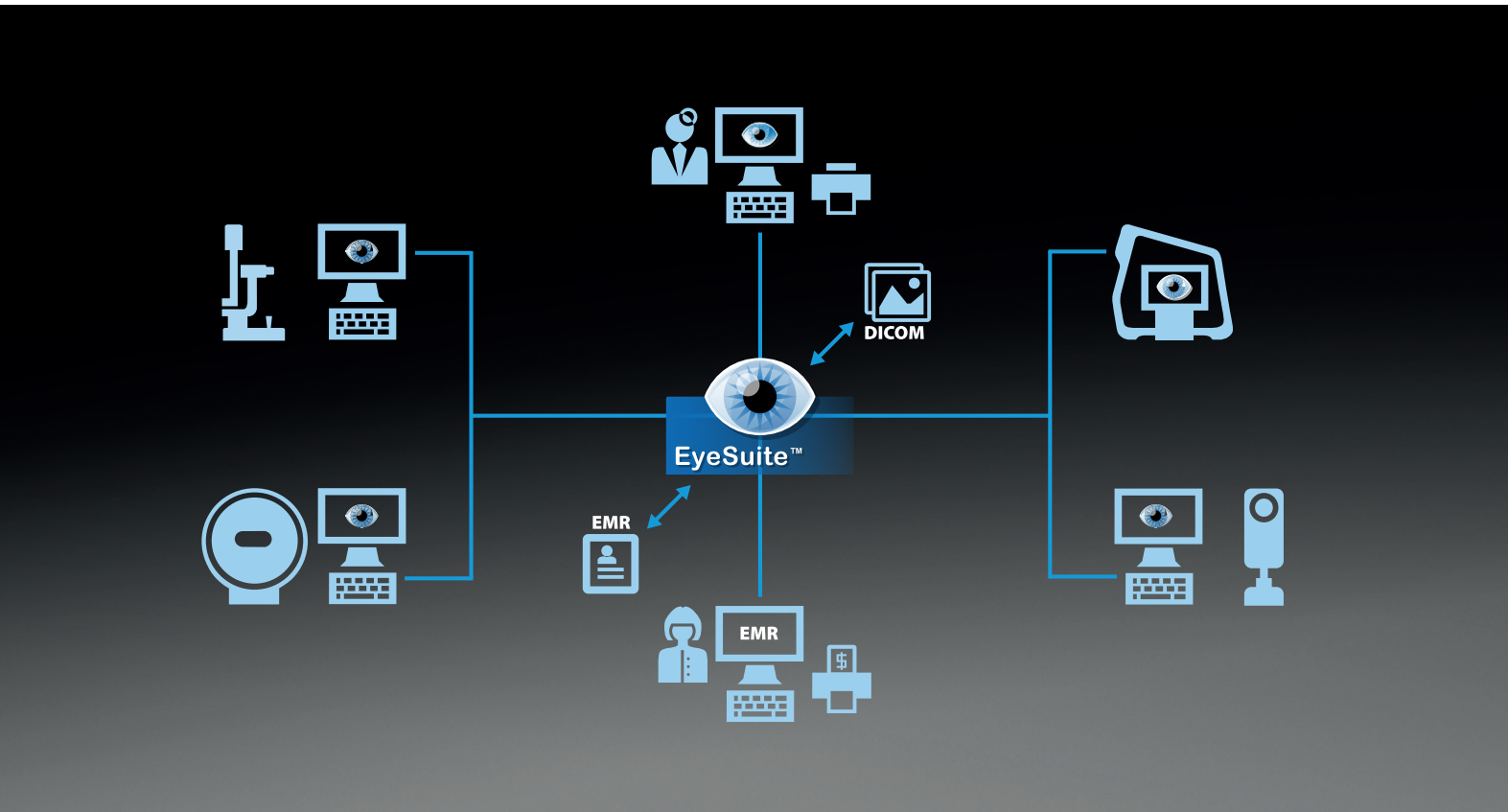

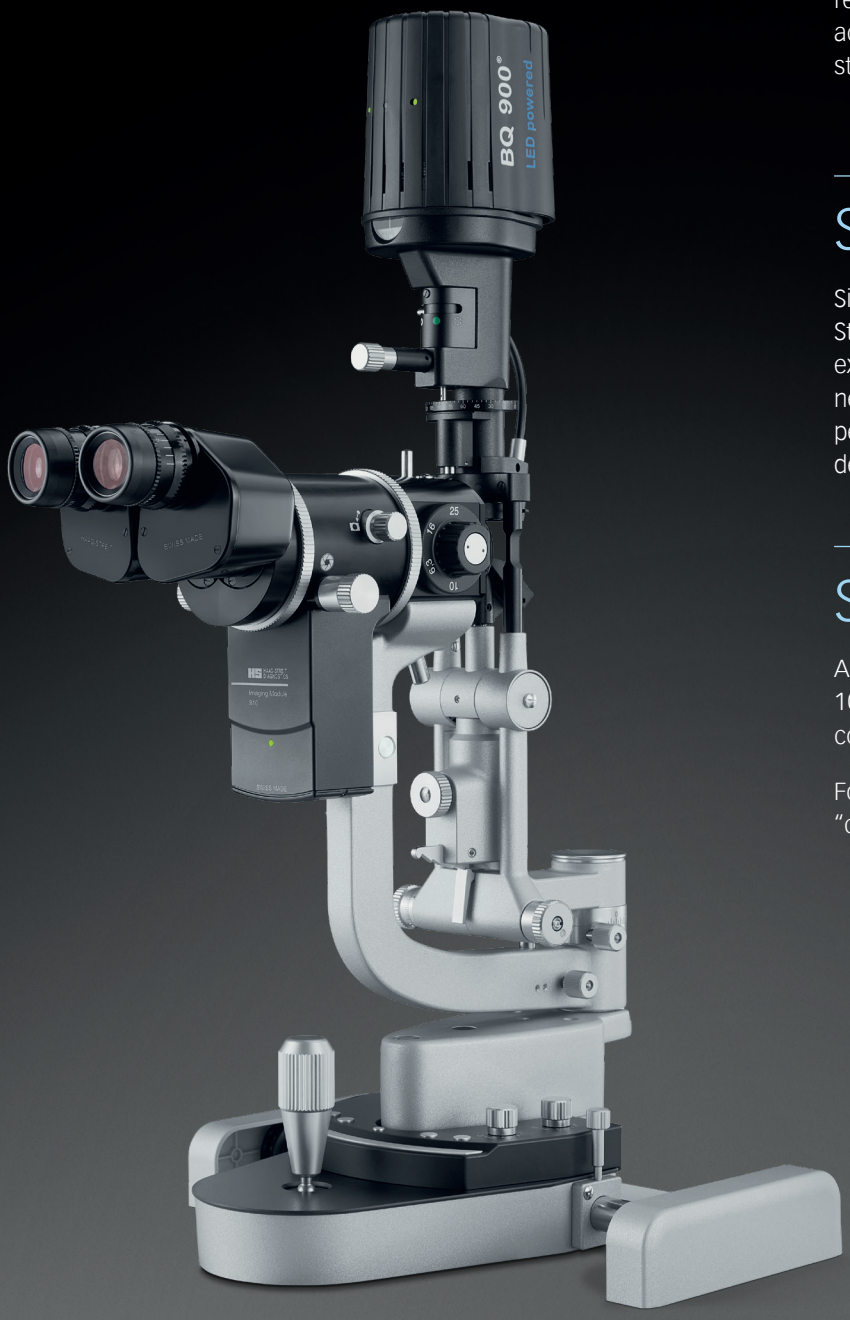

Excellent optics

The quality of the optical system determines the results of whatever application a slit lamp is used for. The BQ 900 is equipped with an elaborated optical system, manufactured for highest quality requirements. The result is a superb view, allowing accurate diagnostics, safe patient treatment, and stunning imaging results.

Superior mechanics

Since its foundation more than 160 years ago, Haag-Streit has stood for high-precision mechanics. This experience, combined with outstanding Swiss engineering and the use of high-grade materials, ensures perfect mechanics in the BQ 900, which can last for decades.

Sustainable investment

All Haag-Streit slit lamps come with an extensive 10-year warranty period. This emphasizes total commitment to the quality of our craftsmanship.

For us, it's just a tiny step, but for our customers, it is "confidence that lasts."

Swiss made

HS-Art.No. 1511.7200699.02130

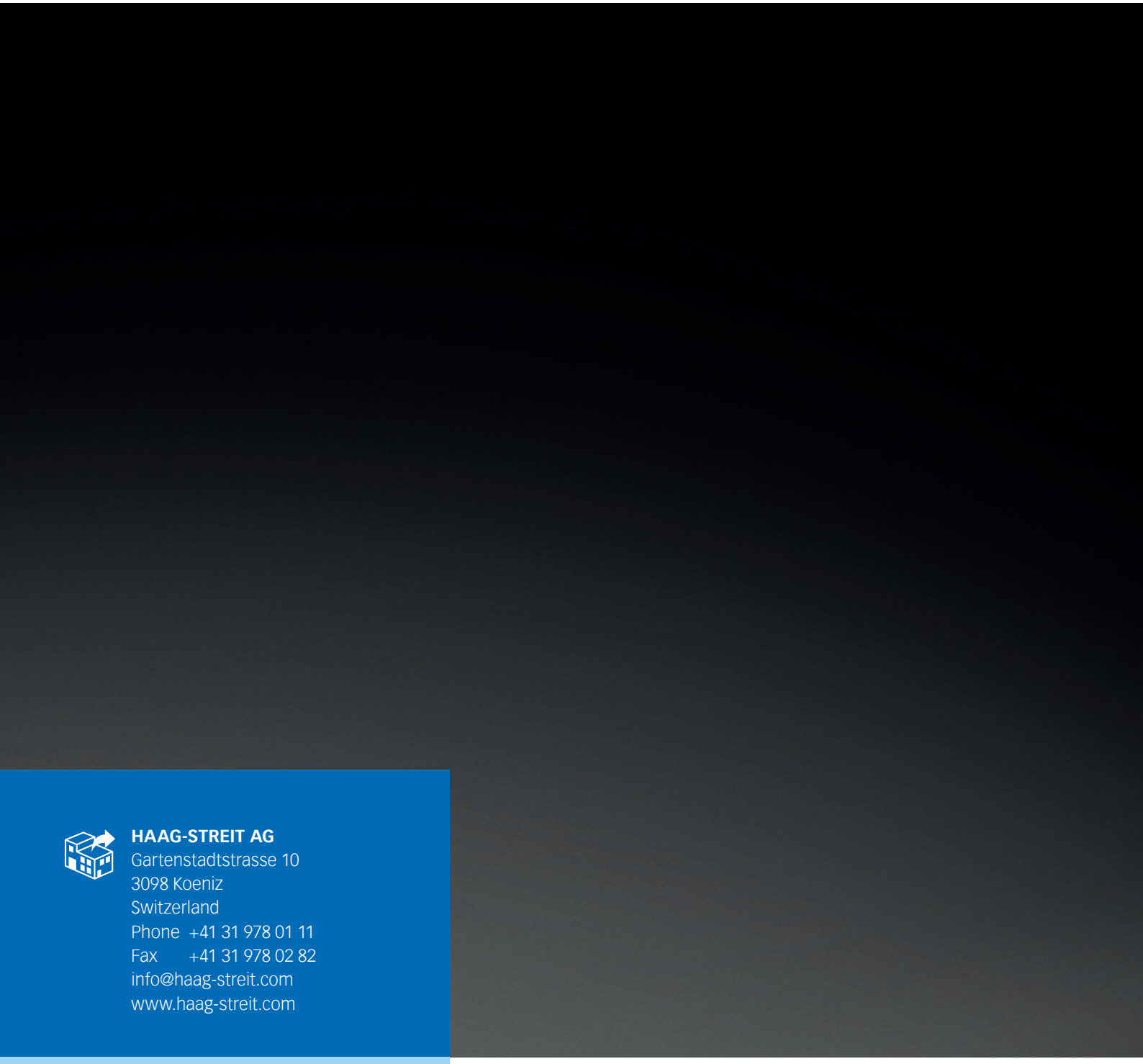

HAAG-STREIT AG
Gartenstadtstrasse 10
3098 Koeniz
Switzerland
Phone +41 31 978 01 11
Fax +41 31 978 02 82
info@haag-streit.com
www.haag-streit.com

©Haag-Streit AG, 3098 Koeniz, Switzerland
13. Edition / 2026 – 07

CE